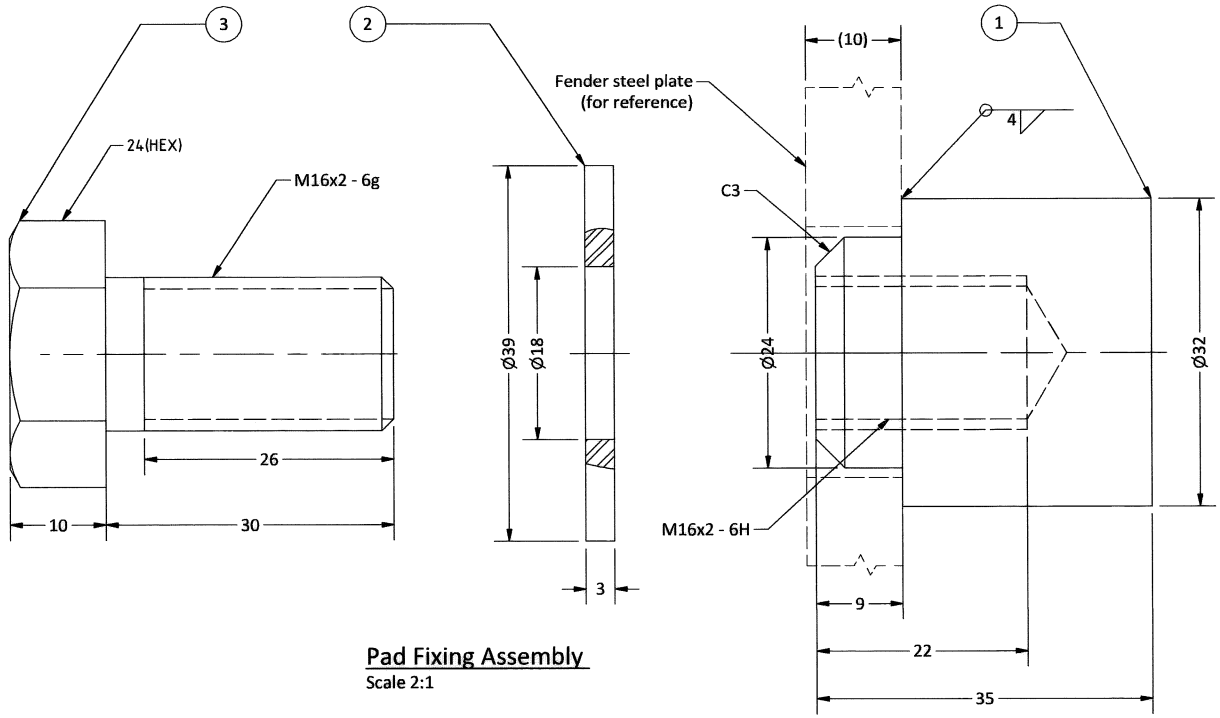

Pad Fixing Assembly

Scale 2:1

General Notes:

1. This is a procurement drawing for ACP stock number MAR-FND-00042.
2. All dimensions are in millimeters, unless otherwise specified.
3. Deburr and break all sharp edges and corners.
4. Reference drawing: 5806-G-T-M-2061.

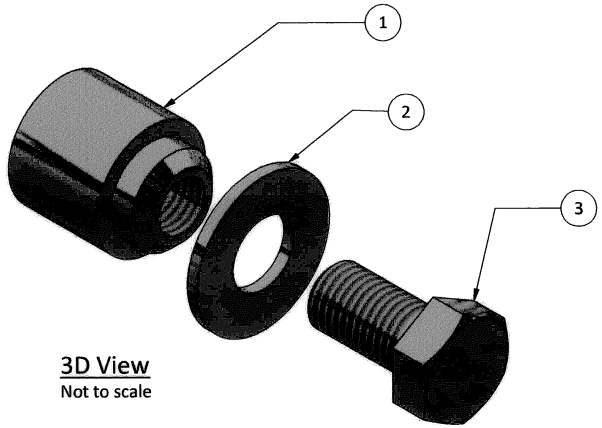

3D View

Not to scale

Item	Qty.	Name	Description
3	1	M16 Hex Bolt	Hex bolt, M16-2.0 x 30mm, A-4 or AISI 316
2	1	Washer	Washer, Plain, M16, A-4 or AISI 316
1	1	Insert	AISI 316 Insert as per drawing

Part list for a Pad Fixing Assembly

Drawn	A. D. Medina					
Designed	As built					
Verified	R. Rojas					
Scale	As shown					
Tolerance	Gen. ISO 2768: -mk					
Date	22-Apr-2021					
Sheet	Sheet Size	Rev.	Description	Dsgn.	Submt.	
1/1	A3	Date		Chckd.	Apprvd.	

DIVISIÓN DE INGENIERÍA, EDIF. 721, COROZAL OESTE, PANAMÁ

Third Set of Locks

Approach Fender

Pad Fixing Assembly

5007-0001-M-0005

Checked: Diana Ávila
Acting Supervisor,
Machine Design Team

Submitted: Armando Ayala
Acting Manager,
Electromechanical Eng. Section

Approved:
Acting Manager,
Engineering Division